HY-PRO FILTRATION

S75-S76 Low Pressure Spin-ons

Featuring Hy-Pro G8 Dualglass high performance filter element technology

Applications

- Hy-Pro Low pressure S series filters are ideal for installation on the return line to remove contaminate ingested or generated by the system. Functions include off-line filtration (kidney loop or filter cart) and some suction applications.
- Automotive manufacturing/assembly machine tools.
- Mobile applications such as waste haulers & transit .
- Filter carts and filter panels.
- Power unit return line/suction.

Features, Benefits, Advantages	
DFE rated elements (Dynamic Filter Efficiency)	G8 Dualglass and PE glass elements are DFE rated to assure performance even when exposed to the toughest hydraulic systems (See DFE literature for details).
Low Housing Pressure Drop	Unique internal flow paths provide low resistance to flow. (Low pressure drop).
True Differential Pressure gage	Visual differential bar gage makes element service decision easier tan typical pressure gages.

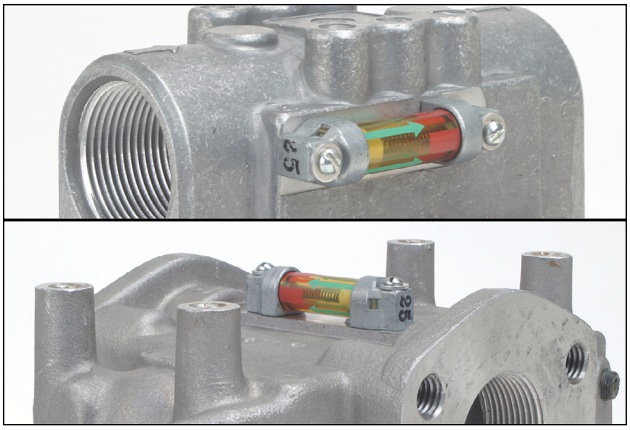

Product Specifications	
Operating Pressure	S75 200 psi (14 bar) max
	S75D 200 psi (14 bar) max
	S76 200 psi (14 bar) max
Flow rate	S75 50 gpm (186 lpm)
	S75D 100 gpm (373 lpm)
	S76 18 gpm (67 lpm)
Design safety factor	2.5:1
Element collapse	100 psid (7 bar)
Assembly material	Head: Aluminum
	Canister: Steel
Fluid compatibility (ISO 2948)	Compatible with all petroleum, based oils, High Water Based, oil/ water emulsion, and specified synthetic fluids with Flurocarbon or EPR seals (call factory)
Bypass setting	25 psid (1.77 bar) standard see reverse for other options
Weight (w/element)	S75L4 5.5 lbs
	S75L8 12 lbs
	S76L4 2.3 lbs
Temperature rating	Nitrile -40°F(-40°C) ~ 225°F (107°C)
	Viton® -15°F(-26°C) ~ 275°F(135°C)

Viton® is a registered trademark of E. I. du Pont de Nemours and Company or its affiliates.

HY-PRO

SPIN-ON ASSEMBLY SELECTION AND SIZING GUIDELINES

Effective filter sizing requires consideration of flow rate, viscosity (operating and cold start), fluid type and degree of filtration. When properly sized, bypass during cold start can be avoided/minimized and optimum element efficiency and life achieved. The filter assembly differential pressure values provided for sizing differ for each media code, and assume 150 SSU (32cSt) viscosity and 0.86 fluid specific gravity. Use the following steps to identify the correct high pressure filter assembly.

1. Calculate Δp coefficient at both operating and cold start viscosity:

$$\Delta p \text{ Coefficient} = \frac{\text{Actual Operating Viscosity (SSU)}}{150} \times \frac{\text{Actual S.G.}}{0.86}$$

2. Calculate actual clean filter assembly Δp at both operating and cold start viscosity:

Actual assembly clean Δp = Flow rate x Δp Coefficient x Assembly Δp factor (from sizing table)

3. Sizing Recommendations to optimize performance and permit future flexibility:

- To avoid or minimize bypass during cold start the actual assembly clean Δp calculation should be repeated for start-up conditions if cold starts are frequent.
- Actual assembly clean Δp should not exceed 5 psid at normal operating viscosity.
- If suitable assembly size is approaching the upper limit of the recommended flow rate at the desired degree of filtration consider increasing the assembly to the next larger size if a finer degree of filtration might be preferred in the future. This practice allows the future flexibility to enhance fluid cleanliness without compromising clean Δp or filter element life.
- Once a suitable filter assembly size is determined consider increasing the assembly to the next larger size to optimize filter element life and avoid bypass during cold start.
- When using water glycol or other specified synthetics we recommend increasing the filter assembly by 1~2 sizes.

Differential Pressure Flow Factor - Δp/gpm (ΔBar/lpm)

Media Code	S764 assembly (20 gpm max)	S768 assembly (30 gpm max)	S754 assembly (40 gpm max)	S758 assembly (60 gpm max)	S75D4 assembly (80 gpm max)	S75D8 assembly (120 gpm max)
1M	1.210 (0.0232)	0.726 (0.0139)	0.521 (0.0100)	0.313 (0.0060)	0.261 (0.0050)	0.156 (0.0030)
3C	0.773 (0.0148)	0.464 (0.0089)	0.429 (0.0082)	0.257 (0.0049)	0.214 (0.0041)	0.129 (0.0025)
3M	0.909 (0.0174)	0.545 (0.0104)	0.367 (0.0070)	0.220 (0.0042)	0.183 (0.0035)	0.110 (0.0021)
6M	0.695 (0.0133)	0.417 (0.0080)	0.298 (0.0057)	0.179 (0.0034)	0.149 (0.0028)	0.089 (0.0017)
10C	0.500 (0.0096)	0.300 (0.0057)	0.182 (0.0035)	0.109 (0.0021)	0.091 (0.0018)	0.055 (0.0011)
12M	0.471 (0.0090)	0.283 (0.0054)	0.168 (0.0032)	0.101 (0.0019)	0.084 (0.0016)	0.050 (0.0009)
25A	0.479 (0.0092)	0.287 (0.0055)	0.178 (0.0034)	0.107 (0.0020)	0.089 (0.0017)	0.053 (0.0010)
25C	0.444 (0.0085)	0.266 (0.0051)	0.162 (0.0031)	0.097 (0.0018)	0.081 (0.0016)	0.049 (0.0009)
25M	0.43 (0.0082)	0.258 (0.0049)	0.158 (0.0030)	0.095 (0.0017)	0.079 (0.0015)	0.047 (0.0009)
74W	0.172 (0.0033)	0.103 (0.0019)	0.063 (0.0012)	0.038 (0.0007)	0.032 (0.0006)	0.019 (0.0003)
149W	0.129 (0.0024)	0.077 (0.0014)	0.047 (0.0009)	0.028 (0.0006)	0.024 (0.0005)	0.014 (0.0002)

S76 INSTALLATION DRAWING

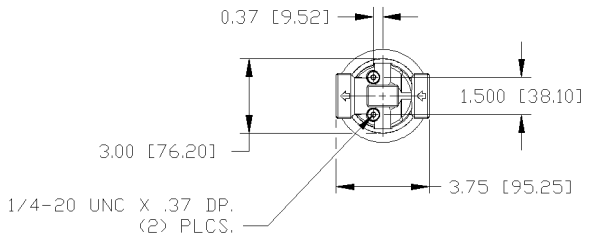

S75 INSTALLATION DRAWING

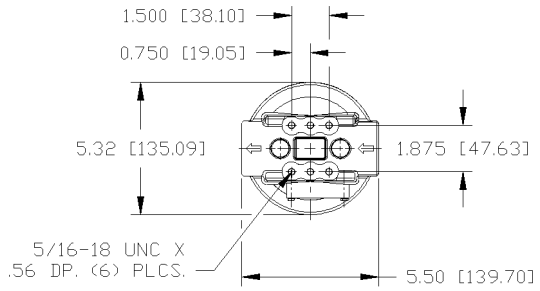

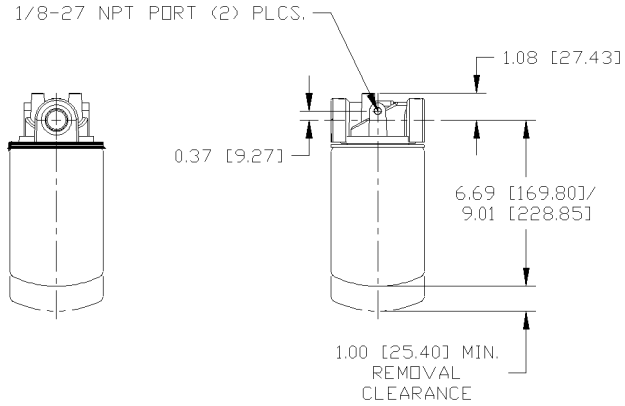

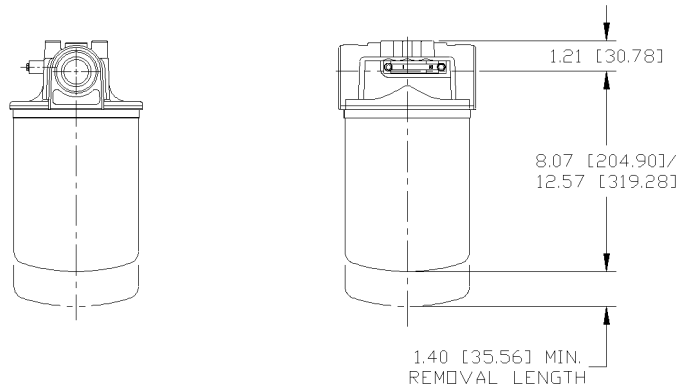

S75D INSTALLATION DRAWING

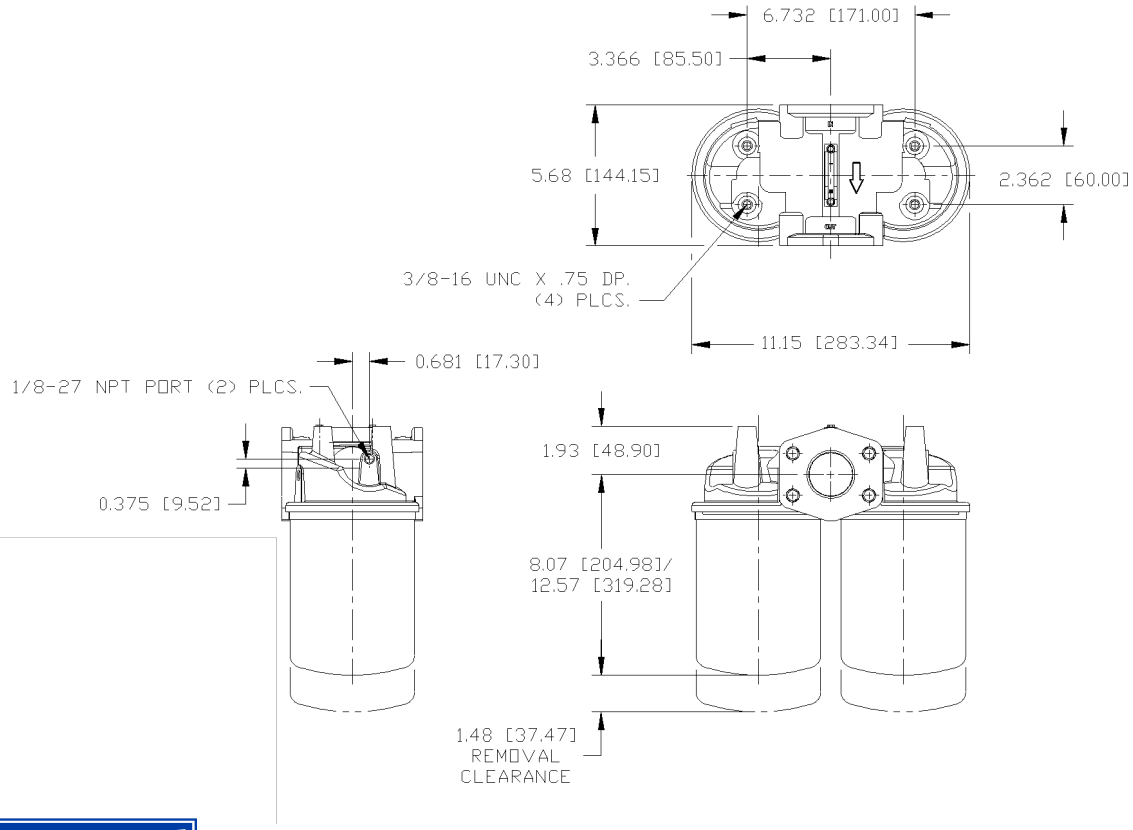

HY-PRO